CORE

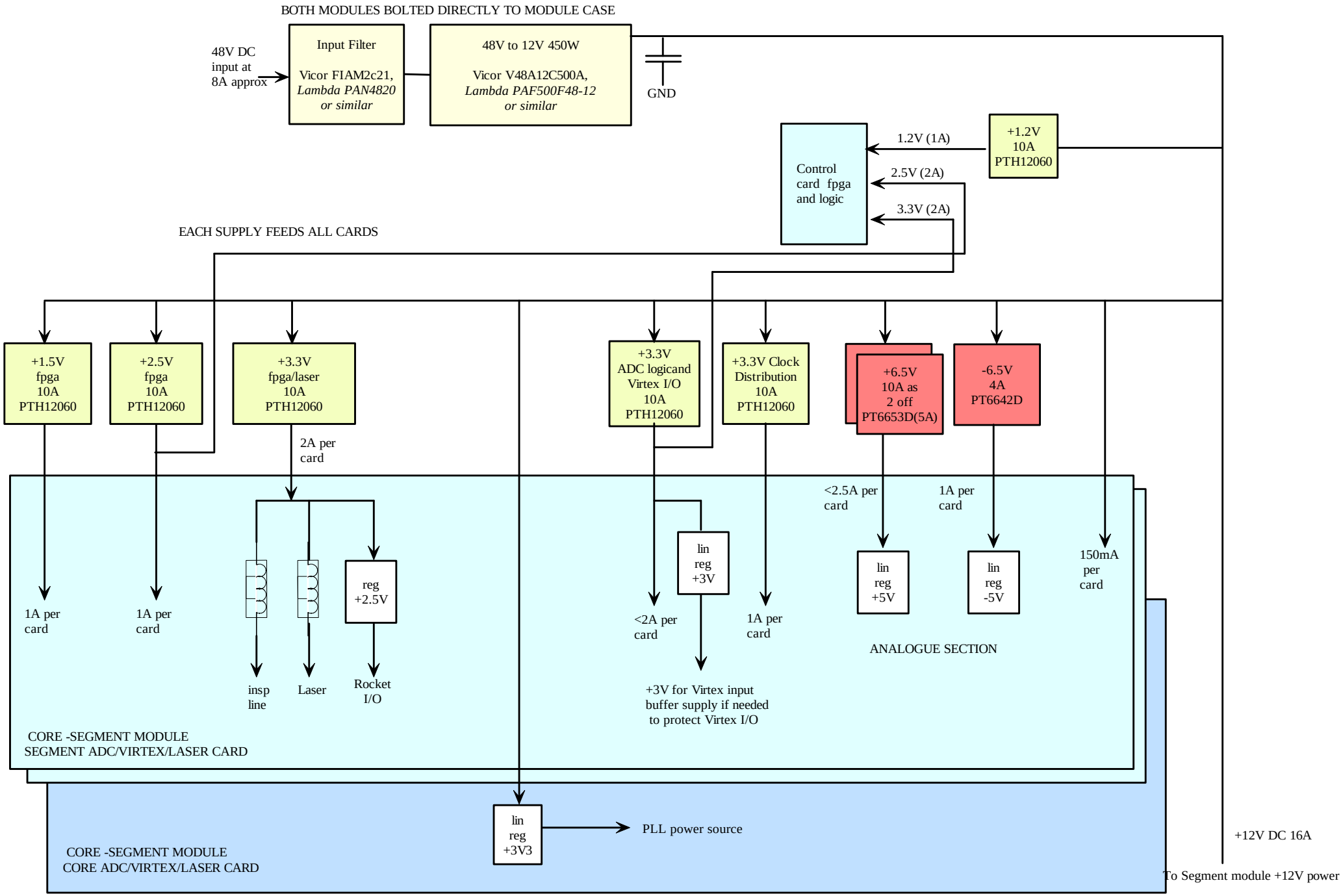
BOTH MODULES BOLTED DIRECTLY TO MODULE CASE
48V DC input at 8A approx
Input Filter
Vicor FIAM2c21, Lambda PAN4820 or similar
48V to 12V 450W
Vicor V48A12C500A, Lambda PAF500F48-12 or similar
GND
Control card fpga and logic
1.2V (1A)
2.5V (2A)
3.3V (2A)
+1.2V 10A PTH12060
EACH SUPPLY FEEDS ALL CARDS
+1.5V fpga 10A PTH12060
+2.5V fpga 10A PTH12060
+3.3V fpga/laser 10A PTH12060
+3.3V ADC logicand Virtex I/O 10A PTH12060
+3.3V Clock Distribution 10A PTH12060
+6.5V 10A as 2 off PT6653D(5A)
-6.5V 4A PT6642D
2A per card
<2.5A per card
1A per card
1A per card
1A per card
reg +2.5V
lin reg +3V
lin reg +5V
lin reg -5V
150mA per card
<2A per card
1A per card
insp line
Laser
Rocket I/O
+3V for Virtex input buffer supply if needed to protect Virtex I/O
ANALOGUE SECTION
CORE -SEGMENT MODULE
SEGMENT ADC/VIRTEX/LASER CARD
lin reg +3V3
PLL power source
CORE -SEGMENT MODULE
CORE ADC/VIRTEX/LASER CARD
+12V DC 16A
To Segment module +12V power
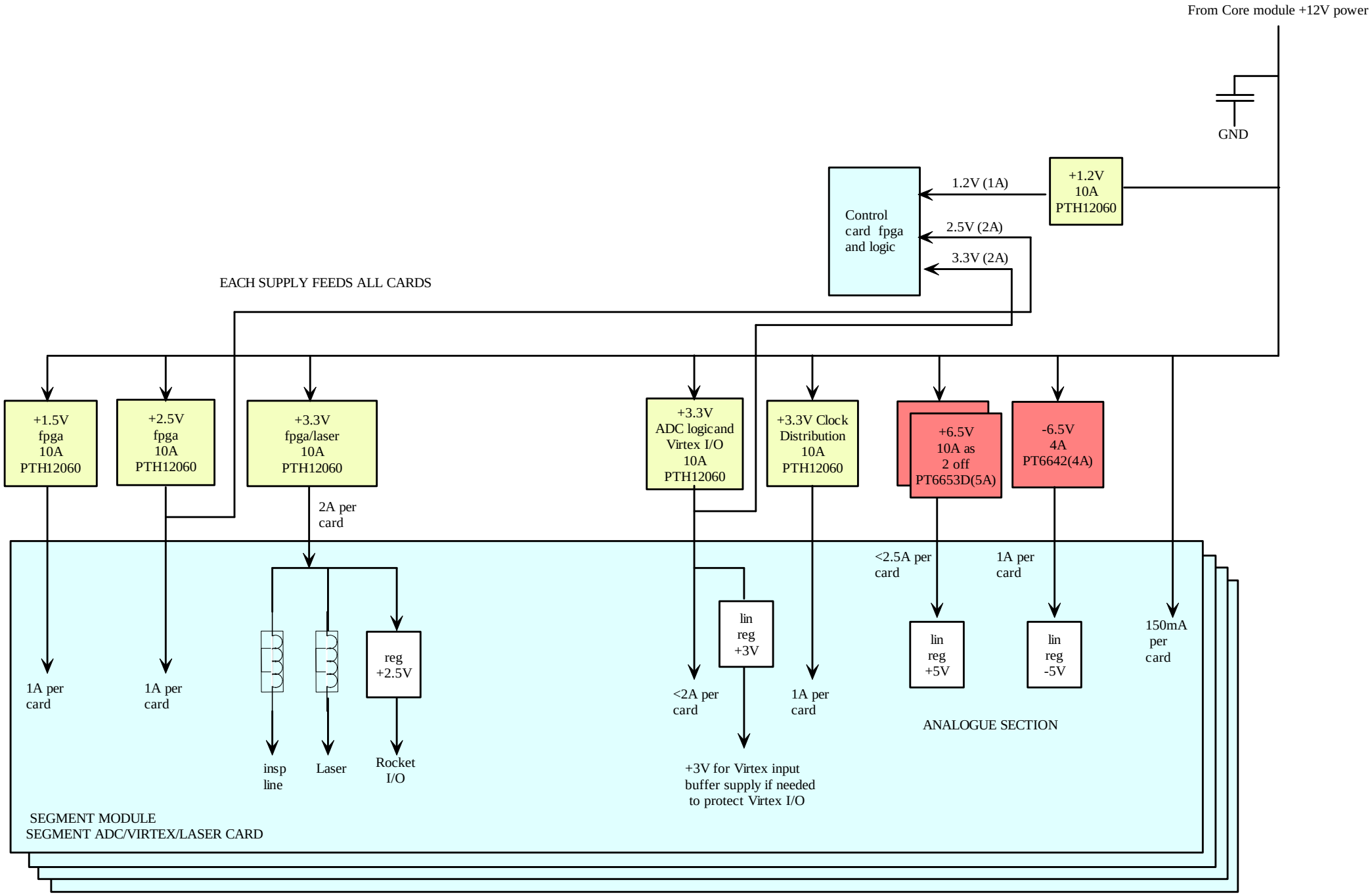
SEGMENT MODULE